REV	DESCRIPTION	DATE	REVISIOR
A	Teierance adjustment based on 21840ct3	Sep01,20	Kit
B	Dimension 1.50(10X) adjusted to (1.54)REF Dimension 1.25(8X) adjusted to (1.25)REF	Mar02,23	Stanley
C	Add Thermal Resistance	July23,24	Stanley

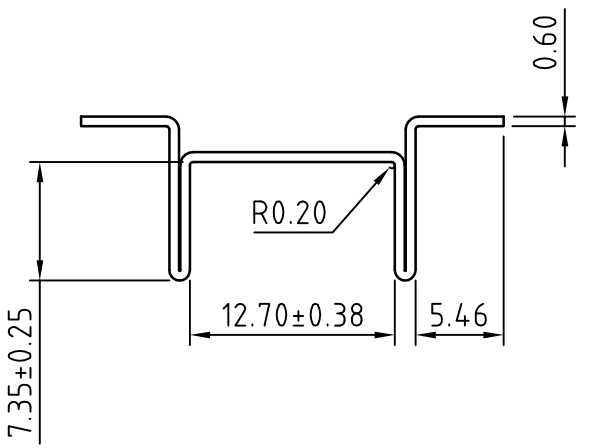

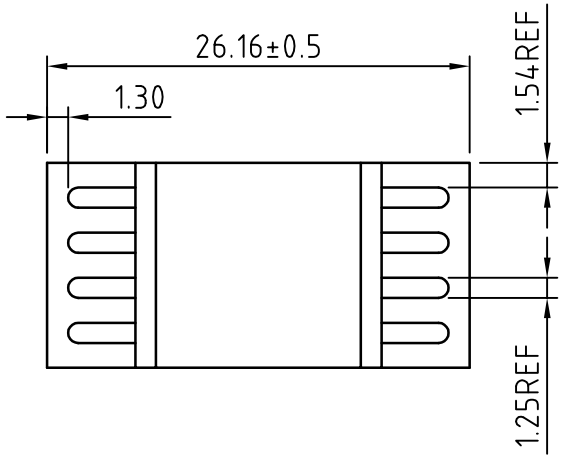

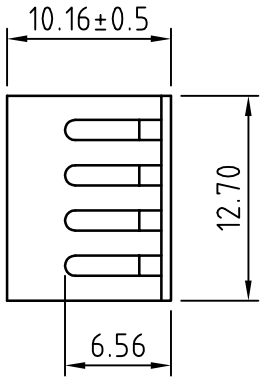

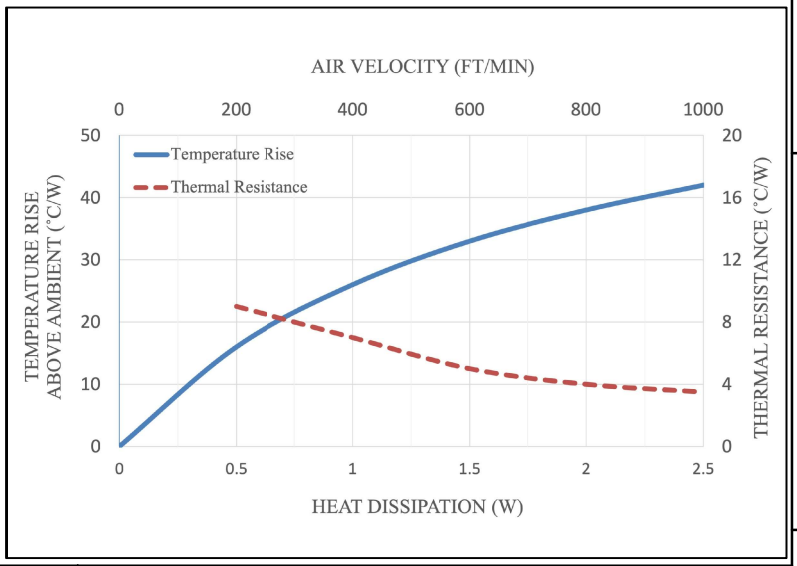

NOTE:
1. MATERIAL: CUPPER T=0.6±0.1mm
2. FINISH: MATTE TIN PLATED
3. PACKAGE COOLED : D-PAK(TO-268)

	UNLESS OTHERWISE SPEC. DIMENSIONS ARE IN MM TOLERANCES ON	龍德精密有限公司 E-MAIL:lungde@lungder.com.tw	LDMC Metal Stamping LONG DER MACHINERY CO.,LTD.	
	DECIMAL: .X ±0.8 .XX±0.5 .XXX±0.3	ITEM	HEAT DISSIPATOR	
THIRD ANGLE PROJECTION	ANGLE: ±1/2°			
	DRAWN: Eric Chen / CHECKED: Kit Lee	SCALE 1:1	PART NO: LDM-006C-CTE5-M	REV C