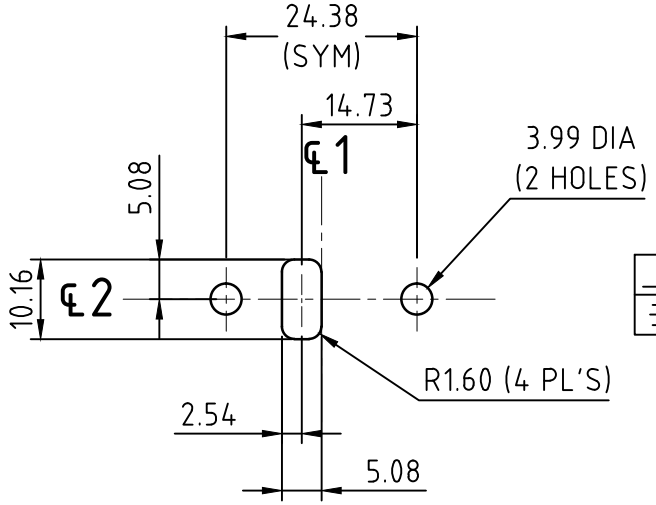

HOLE PATTERN

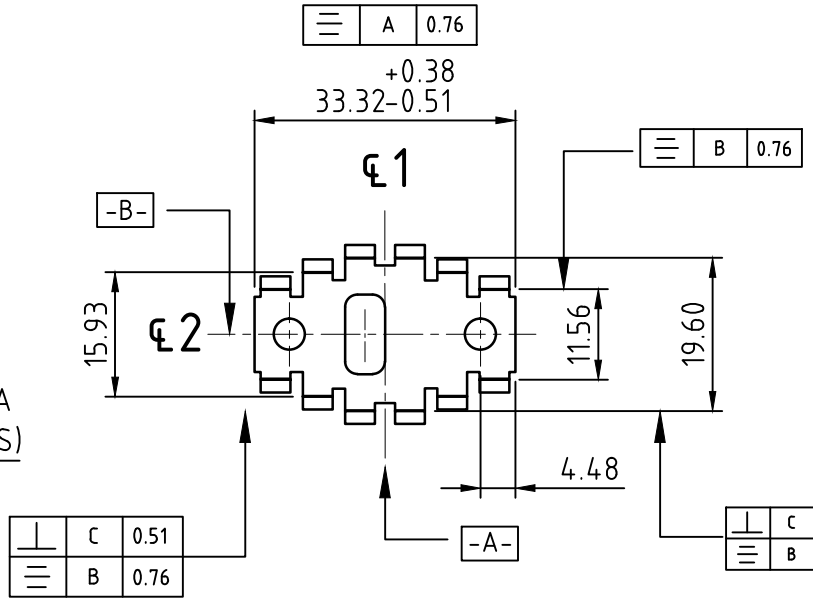

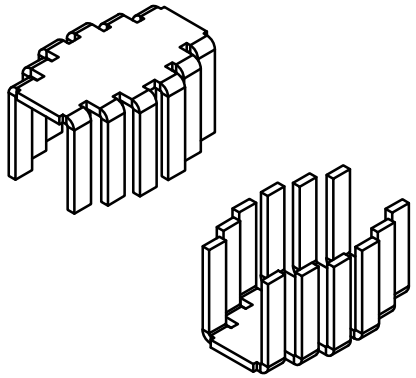

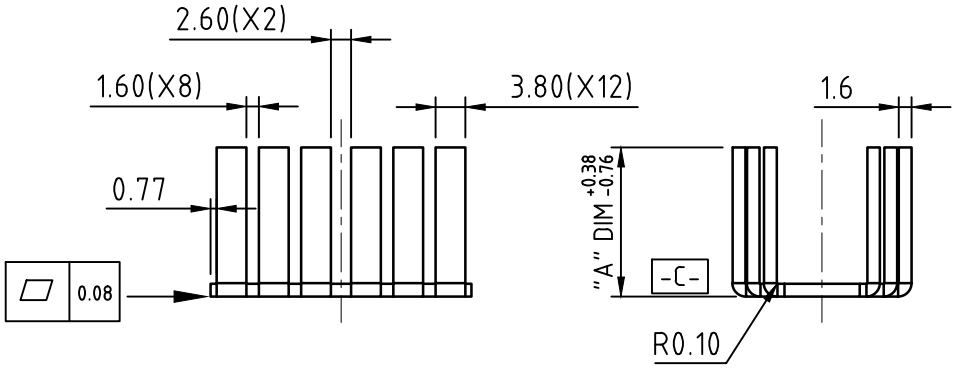

HEAT DISSIPATOR	
	"A"DIM +0.38 -0.76
1PP	25.4
2PP	19.05
3PP	12.7
4PP	6.35

NOTE:
1. MATERIAL: 1.6 THK AL 1050
2. FINISH:
   (1) Commercial Black Anodized (EX: LDM-016A-LAE66-1PPCB)
   (2) Military Black (EX:LDM-016A-LAE66-1PPMB)

	UNLESS OTHERWISE SPEC. DIMENSIONS ARE IN MM TOLERANCES ON	龍德精密有限公司 E-MAIL:lungde@lungder.com.tw	LDMC Metal Stamping LONG DER MACHINERY CO.,LTD.
	DECIMAL: .X ± .XX±0.2 .XXX±	ITEM	HEAT SINK
THIRD ANGLE PROJECTION	ANGLE: ±		
	MATERIAL:	SCALE 1:1	PART NO: LDM-016A-LAE66 REV 1
	FINISH:		